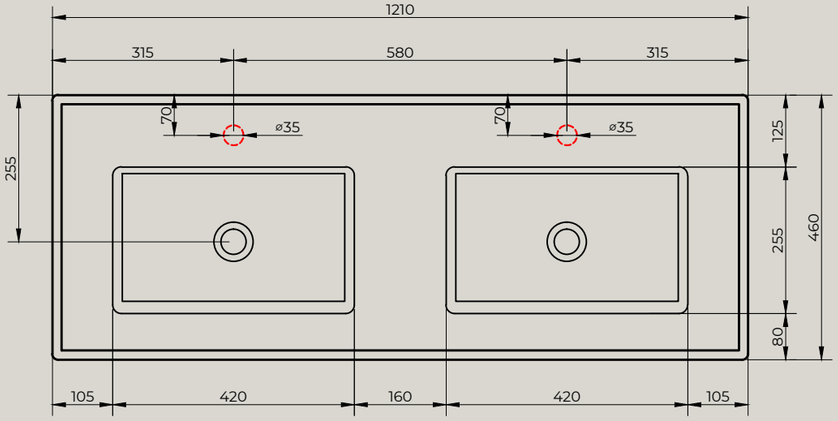

Top view

Quarter Drilled Tap Hole 35mm at Back

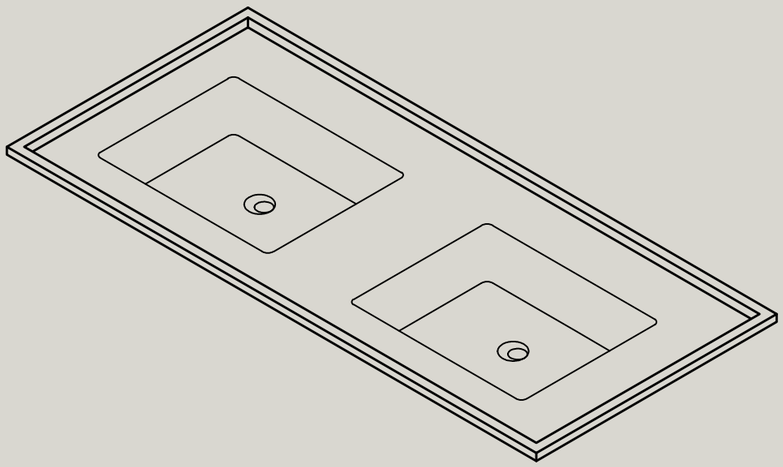

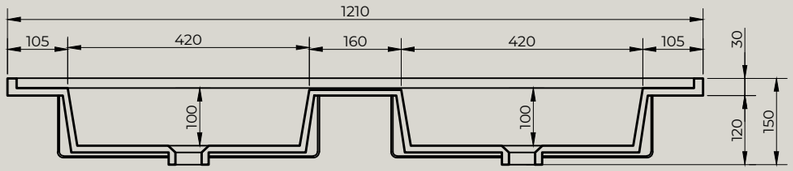

Front view

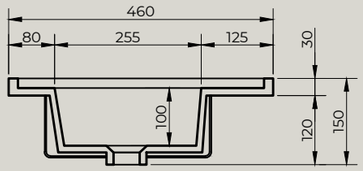

Side view

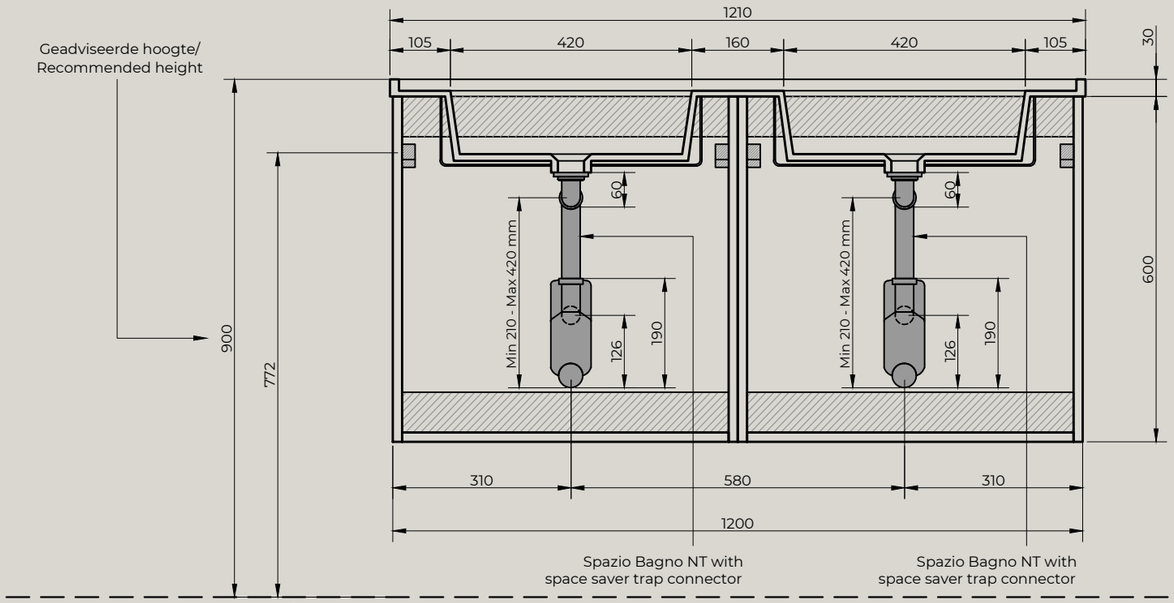

MARTENS & MEIJER®
bathroomware

Product Name	Solid surface fountain with inner basin, matte white
Material	Pure Solid Surface Stone
Product size	1210x460x135 mm (square double)