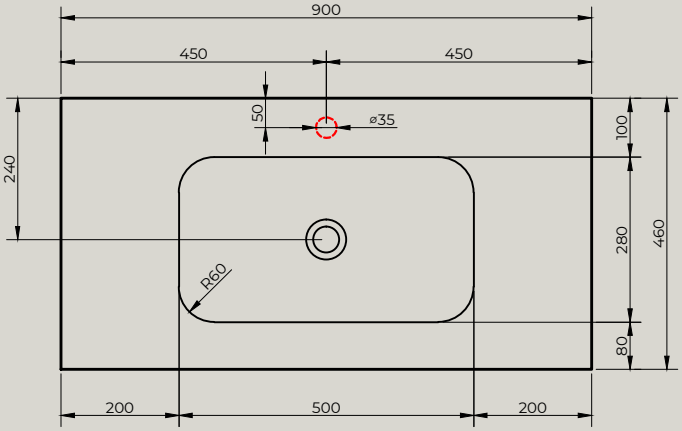

Top view

Quarter Drilled Tap Hole 35mm at Back

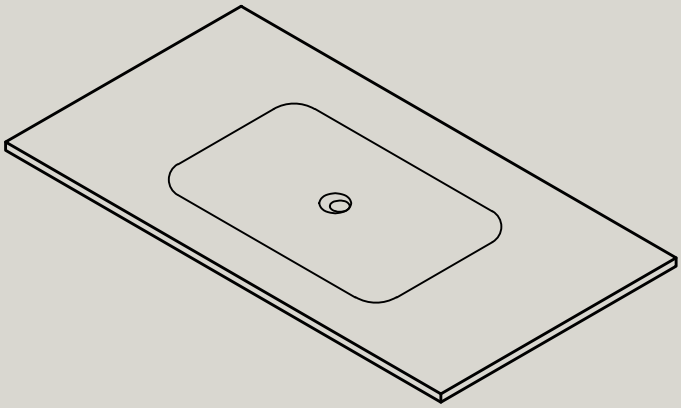

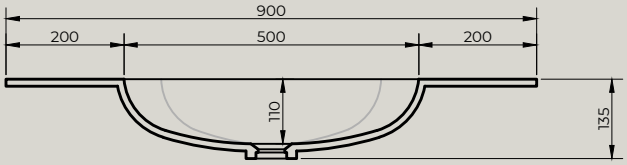

Front view

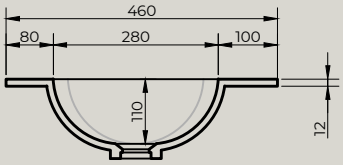

Side view

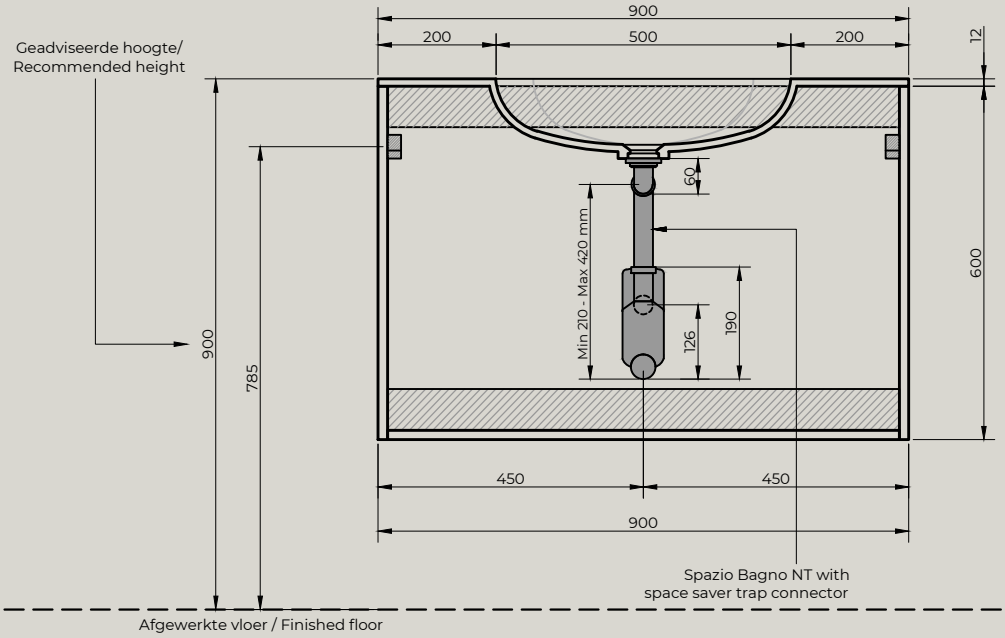

MARTENS & MEIJER bathroomware	Product Name	Solid surface fountain with inner basin, matte white
	Material	Pure Solid Surface Stone
	Product size	900x460x135 mm